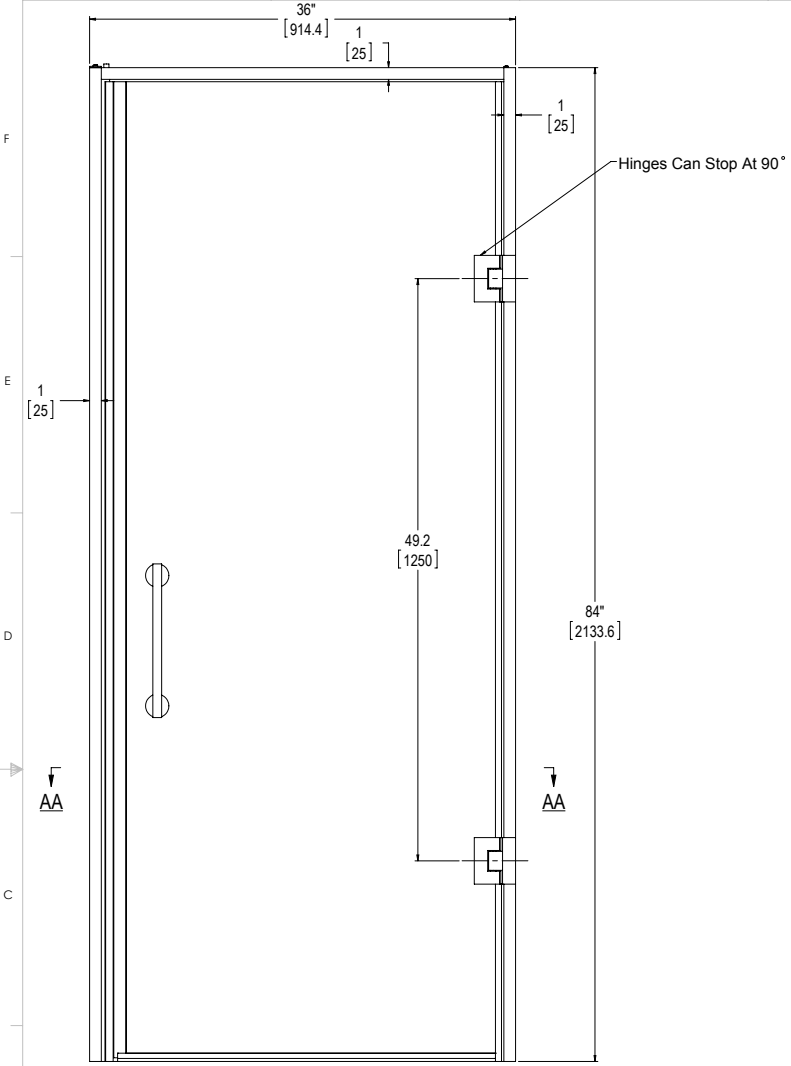

FRONT VIEW

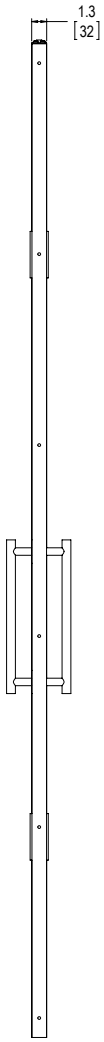

SIDE VIEW

Note:

A300-PHSD-LT is completely mirror symmetry with A300-PHSD-RT.
Any Undefined information Please refer to A300-PHSD-RT,

Pull And Hinges Use
304 Stainless Steel. Polished Finish.
Glass Use Tempered Natural Clear Glass.

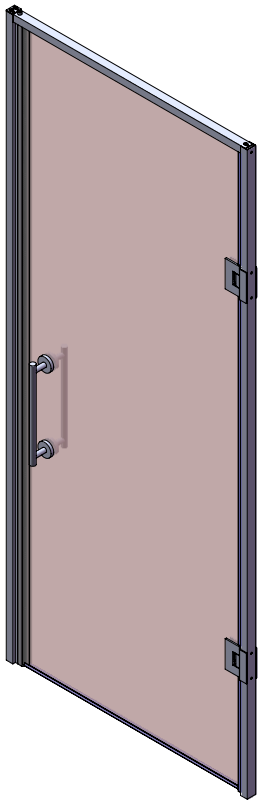

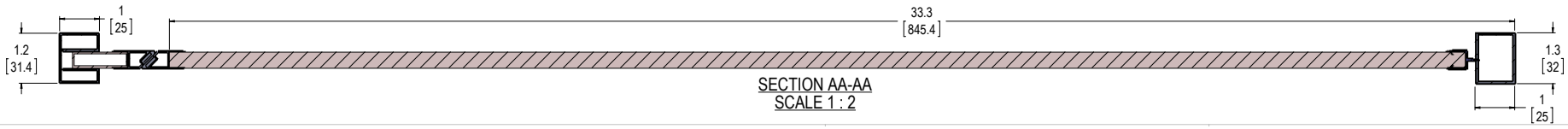

SECTION AA-AA
SCALE 1 : 2